DO NOT SCALE

IF IN DOUBT ASK

© COPYRIGHT RESERVED DIFFUSION

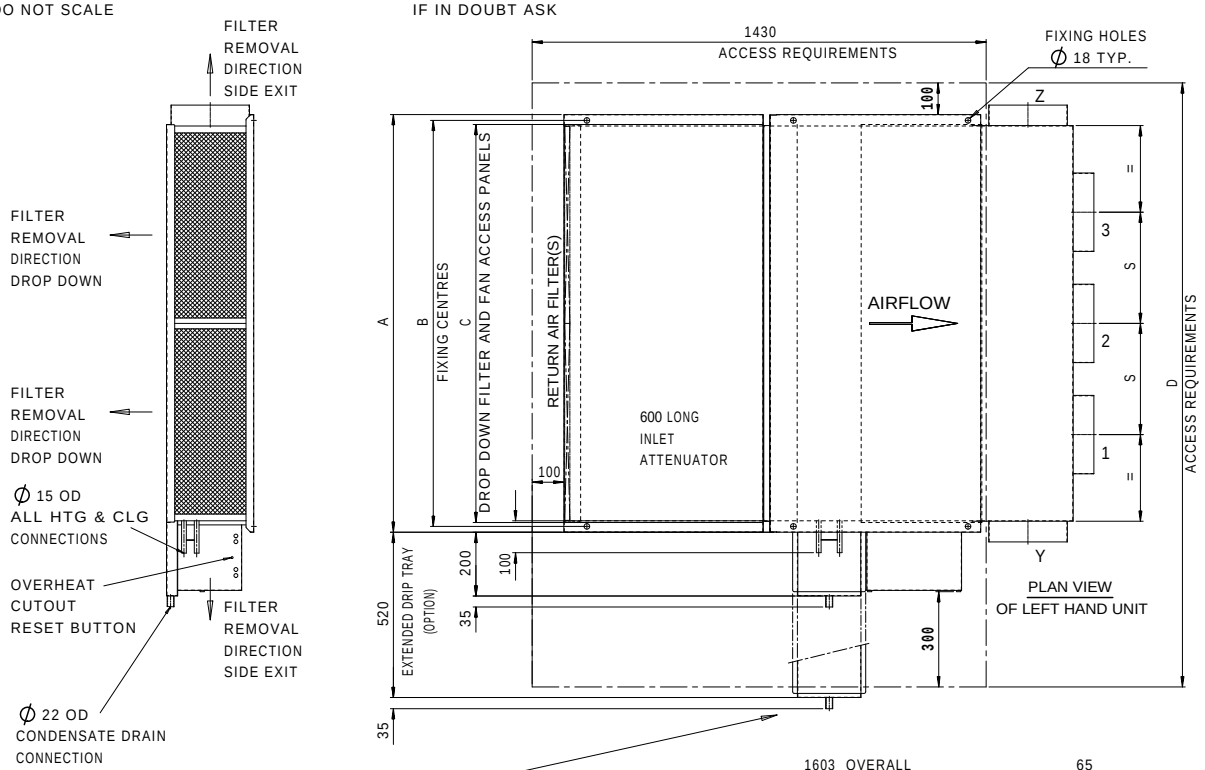

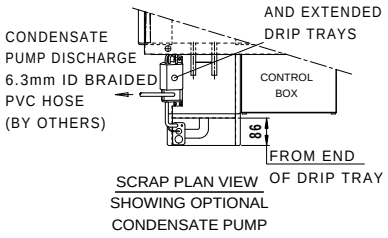

SCRAP PLAN VIEW SHOWING OPTIONAL CONDENSATE PUMP

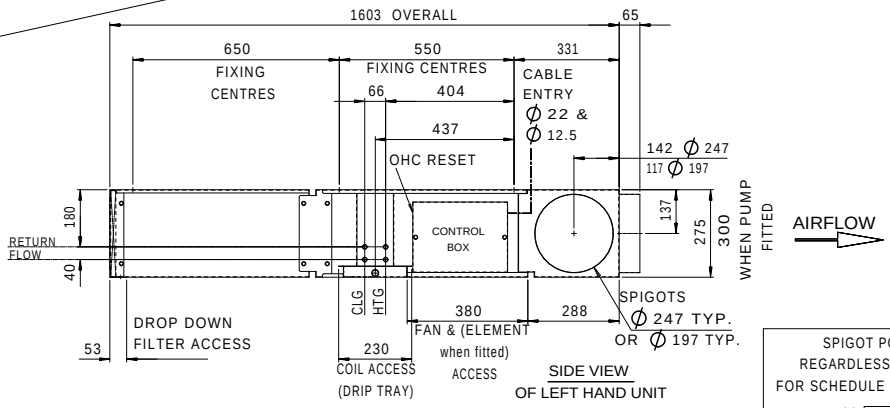

SIDE VIEW OF LEFT HAND UNIT

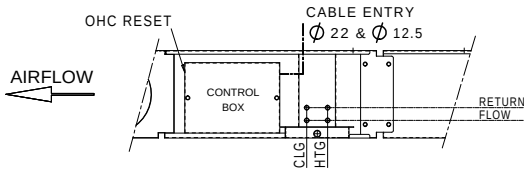

SCRAP SIDE VIEW OF RIGHT HAND UNIT
SHOWING HTG & CLG CONNECTIONS, CABLE ENTRY AND OHC RESET BUTTON POSITION REVERSED

SPIGOT POSITIONS REGARDLESS OF HANDING FOR SCHEDULE PURPOSES NTS.

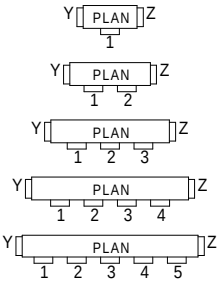

NOTES:

1. ACOUSTIC LINED UNIT AS STANDARD.

2. LEFT HAND UNIT AS DRAWN, RIGHT HAND OPPOSITE HAND, (HEATING AND COOLING CONNECTIONS REVERSED SEE SCRAP SIDE VIEW OF RIGHT HAND UNIT). UNITS ARE HANDED LOOKING INTO THE DISCHARGE OF THE UNIT, WITH THE UNIT IN ITS INSTALLED ORIENTATION. THE ABOVE UNIT IS DETAILED AS LEFT HAND COIL CONNECTIONS.

   SPIGOT POSITIONS ARE IDENTIFIED FROM LEFT TO RIGHT WHEN LOOKING INTO THE DISCHARGE, WITH THE UNIT IN ITS INSTALLED ORIENTATION. SPIGOT POSITIONS ARE REGARDLESS OF COIL TAIL HANDINGS.

3. FILTER(S) CAN BE EITHER SIDE REMOVAL OR DROP DOWN AND SLIDE OUT.

4. UNIT FIXINGS (BY OTHERS) TO INCLUDE LARGE WASHERS, ∅ 32 MAXIMUM. ALTERNATIVELY ISOLATION MOUNTS COMPLETE WITH WASHERS ARE AVAILABLE FROM DIFFUSION.

5. UNIT ACCESS REQUIREMENTS: IT IS RECOMMENDED THAT FOR EFFICIENT SERVICEABILITY AND MAINTENANCE OF THESE FAN COIL UNITS THE MINIMUM SITE ACCESS SHOULD BE AS DETAILED ABOVE.

6. KEY TO ABREVIATIONS:
   CLG = COOLING
   HTG = HEATING
   ID = INSIDE DIAMETER
   OD = OUTSIDE DIAMETER
   OHC = OVERHEAT CUTOUT RESET BUTTON (REQUIRED ON ELECTRIC HEAT UNITS ONLY).

7. GENERIC DRAWING: WEIGHTS SHOWN DO NOT INCLUDE EXTENDED DRIP TRAY AND VALVES OR, PUMP ASSEMBLY.

					ACCESS REQUIREMENTS	∅ 247 SPIGOTS (AS DRAWN) STANDARD		∅ 197 SPIGOTS (OPTION)	
UNIT	WEIGHT kg	A	B	C	D	S SPIGOT PITCH (TYP).	TOTAL No. OFF INCLUDING SIDES	S SPIGOT PITCH (TYP).	TOTAL No. OFF INCLUDING SIDES
04/1	42	565	530	503	1150	–	3	250	4
06/1	50	715	680	653	1300	350	4	350	4
08/1	59	915	880	853	1500	350	4	350	4
08/2	65	915	880	853	1500	350	4	350	4
10/1	69	1115	1080	1053	1700	350	5	350	5
10/2	75	1115	1080	1053	1700	350	5	350	5
12/2	86	1315	1280	1253	1900	350	5	350	5
14/2	96	1515	1480	1453	2100	350	6	350	6
14/3	99	1515	1480	1453	2100	350	6	350	6
16/2	106	1715	1680	1653	2300	350	6	350	6
16/3	109	1715	1680	1653	2300	350	6	350	6
18/3	120	1915	1880	1853	2500	350	7	350	7
18/4	125	1915	1880	1853	2500	350	7	350	7

REV.	MOD.NO.	DATE	DRN
2	WEIGHTS UPDATED	16-05-25	MW
1	REQ9690	09-05-25	MW

ALL DIMENSIONS IN mm THIRD ANGLE PROJECTION

METALWORK TOLERANCES UNLESS OTHERWISE STATED: DIMENSIONAL ±0.5mm ANGULAR ±1°

G.A. TOLERANCES UNLESS OTHERWISE STATED: DIMENSIONAL ±4mm ANGULAR ±1°

DRAWING SCALE : 1:1 | PRINT SCALE : N.T.S.

MATERIAL:

FINISH:

DRAWN MW

DATE 09-05-25

CHECKED

DATE

APP'D

DATE

Diffusion
Address: 47 Central Avenue, West Molesey, Surrey, KT8 2QZ
Telephone: +44 (0) 20 8783 0033 Email: cooling@diffusion-group.com
Website: www.diffusion-group.com

TITLE: GENERAL ARRANGEMENT
HIGHLINE 275 DEEP FAN COIL UNIT RANGE C/W 600 LONG INLET ATTENUATOR AND ∅ 247 or ∅ 197 (OPTION) DISCHARGE PLENUM
HL275-WHCH-04-06-08-10-12-14-16-18*60A+CP

JOB: STANDARD OPTION

DRG.NO. A1/42389